Four Points Technology, LLC
13221 Woodland Park Road
Suite 400
Herndon, VA 20171
www.4points.com
703.657.6100

A Service Disabled Veteran Owned Small Business

AIT-7 ORDERING GUIDE

Army Contracting Command-Rock Island's (ACC-RI) Automatic Identification Technology-7 (AIT-7) Contract

Contract Number:

W519TC25DA061

Four Points Technology, LLC
13221 Woodland Park Road, Suite 400
Herndon, VA 20171
(703) 657-6100

Table of Contents

Contract Overview 3
Ordering Procedures 3
Equipment 4
Major Types of Equipment Provided 4
Precautions 5
Equipment Interface Diagrams and/or Photos 5
Zebra ET60 Rugged Tablet 6
DT Research DT382WH (Both HHT F & G) 8
Zebra TC5301 Mobile Handheld 10
Zebra MC9401 Rugged Handheld 11
Zebra MC9401 Rugged Handheld 12
Software 12
ZebraDesigner 3 Software 12
Installation Requirements 13
Virtualization Remote Desktop Services: 14
Compatibility 14
Training 14
Warranty Support 14
Preventative Maintenance 14
GUIDANCE FOR HHT's: 14
GUIDANCE FOR PRINTERS: 15
APM MATS Products 16
CLIN List and Prices 27

Introduction

Contract Overview

The objectives of the Automatic Identification Technology VII (AIT-7) acquisition are to provide a state-of-the-art, common, integrated structure for logistics tracking, locating, and monitoring of assets and processes. Data collection, storage of information, information processing, and transmission of AIT data will greatly enhance systems within Department of Defense (DoD), United States Coast Guard (CG), North Atlantic Treaty Organization (NATO), Coalition Partners, other Foreign Military Sales (FMS), and other federal agencies. AIT technologies will provide standardization among Government users of AIT components purchased under this contract.

The contract shall provide for state-of-the-art, commercial items needed for automatic identification, data collection, keyless data entry, data processing, data storage, data retrieval, data transmission, and the tracking of assets, including the use of Radio Frequency (RF) technology for users throughout DoD, CG, NATO, Coalition Partners, other FMS, other federal agencies, and contractor purchasers in support of DoD.

Ordering Procedures

The mandatory ordering procedures to use the AIT-7 contract to obtain hardware, software, and services can be found in the Ordering Guide. Questions regarding these guidelines and procedures for placing orders against the contract should be directed to:

Ashley Atkins
Contracting Officer's Representative (COR), PL LIS
Office: 540-287-4842
Email: ashley.m.atkins2.civ@army.mil

Questions of a contractual nature should be directed to the Procuring Contracting Officer (PCO), Army Contracting Command – Rock Island (ACC-RI):

Benjamin Geringer
Contracting Officer
Office: (309) 782-1784
Email: benjamin.l.geringer.civ@mail.mil

John Kerch
Contract Specialist
Office: (309) 782-5830
Email: john.d.kerch.civ@mail.mil

Please contact the below Four Points POCs with all AIT-7 quote requests or to place an AIT-7 order:

John Aller
Office: 571-353-7275
Email: jaller@4points.com

Carl Brown, Jr.
Office: 571-353-7226
Email: cbrownjr@4points.com

The Government can reach out to the above Four Points POCs for additional information regarding Four Points' AIT-7 product offerings. You may also visit our AIT-7 website at the following site – see https://www.4points.com/contract-vehicles/ait7/ .

Equipment

The equipment section shall be organized into sub-sections:

Major Types of Equipment Provided

Equipment Name	Physical Dimensions (WxLxH)	Power Requirements (Wattage/Voltage)	Heat Generated by Equipment
XX01 AA - Hand Held Barcode Terminal A (HHT-A) - Zebra ET60 Rugged Tablet	10.8" x 7.8" x 0.7"	45W / 15V	This device has protections built-in to prevent overheating
XX01 BA - Hand Held Barcode Terminal B (HHT-B) - DT Research DT382WH 8IN Rugged Tablet	5.8" x 9.2" x 1.1"	100 to 240V AC; Output: 19V DC, 3.42A	This device has protections built-in to prevent overheating
XX01 CA - Hand Held Barcode Terminal C (HHT-C) - Zebra ET60 Rugged Tablet	10.8" x 7.8" x 0.7"	45W / 15V	This device has protections built-in to prevent overheating
XX01 FA - Hand Held Terminal - HHT-F - DT Research DT362DN 6" Rugged Table	7.6" x 3.7" x 1.2" (192 x 95 x 31 mm)	65 W / 20 V	This device has protections built-in to prevent overheating
XX01 GA - Hand Held Barcode Terminal H (HHT-G) - DT Research C1D2 Certified DT362DH 6" Rugged Tablet	8.6" x 5.6" x 1.2"	100-240V AC; 12V	This device has protections built-in to prevent overheating

XX01 HA - Hand Held Barcode Terminal H (HHT-H) - Zebra TC5301 Mobile Handheld	6.48" x 3.04" x 0.66"	12 VDC. / Power Consumption. Up to 100 watts	This device has protections built-in to prevent overheating
XX01 HS - HHT-H SLED - Zebra RFD40 RFID Sled	5.94" x 3.3" x in. 6.5"	100-240 VAC / 12V	This device has protections built-in to prevent overheating
XX01 JA - Hand Held Barcode Terminal J (HHT-J) - Zebra ET60 10.1" Rugged Tablet	10.8" x 7.8" x 0.7"	45W / 15V	This device has protections built-in to prevent overheating
XX01 KA - Hand Held Barcode Terminal K (HHT-K) - Zebra MC9401 Rugged Handheld	9.4" x 3.5" x 7.4"	AC Input: 100-240V, 2.8A. DC Output: 12V, 9A, 108W	This device has protections built-in to prevent overheating

Each HHT is a hand-held device used to automatically capture and store data and can accept data through its color touch screen, stylus, full alphanumeric on-screen keypad (OSK), integrated barcode imager, or other attached devices. Each HHT can communicate with the portable/wearable barcode label printer.

Precautions

If two devices come within 1.8 to 3 meters of each other, the Zebra handheld devices sounds an alert. The two users then immediately should keep a distance from each other. If they ignore this warning, the tone repeats itself until there is enough distance between the two Zebra devices. Some of the Zebra devices also vibrate as part of the alert.

Equipment Interface Diagrams and/or Photos

The OC shall contain cable / equipment interface diagrams and /or photos for each CLIN that depict the typical operational configuration and provide instructions for users to specify equipment destination to ensure the AIT-7 equipment is compatible with the commercial power supply and adapter plugs for the geographic area in which it shall be operated.

Zebra ET60 Rugged Tablet:

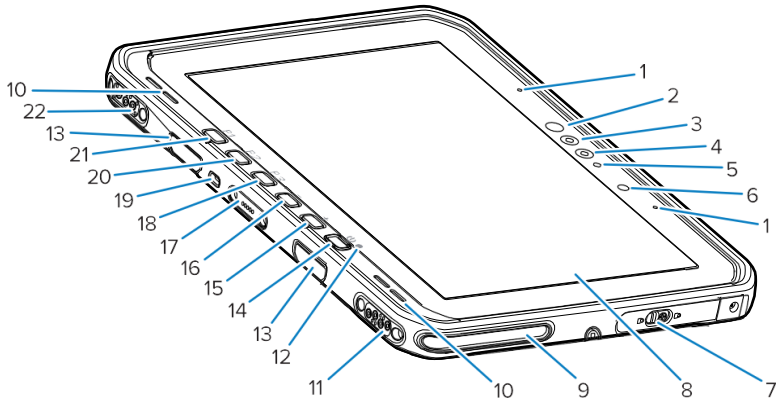

Number	Item	Description
1	Front microphones	Use for voice communications or audio recordings.
2	Windows Hello infrared LED	Illuminates your face with infrared (IR) light during Windows Hello face authentication.
3	Windows Hello infrared camera	Captures your face during Windows Hello face authentication.
4	Front camera	Use for video conferencing.
5	Front camera LED	Illuminates when the front camera is active.
6	Light sensor	Determines ambient light for controlling display backlight intensity.
7	Right access door	Secure door for accessing USB ports.
8	Touch screen	Displays all information needed to operate the device.
9	Dock alignment slot	Assists in aligning the tablet with the dock.
10	Speakers	Provides audio output.
11	Dock USB connector	Provides USB communication through the dock.
12	Charging indicator	Indicates power state and battery charging status while charging and application-generated notifications.
13	Keyboard/shoulder strap mount slots	Provides alignment and mounting of keyboard and shoulder strap clips.
14	Power button	Turns the display on and off. Press and release to turn on the device. Press and hold to restart the device. Provides finger print biometric authentication (optional).
15	**+** button	Programmable button (increase volume - default).
16	**-** button	Programmable button (decrease volume - default).
17	Keyboard interface connector	Provides power and communication with the keyboard.
18	**P3** button	Programmable button (keyboard shortcut Ctrl+Alt +Del - default).
19	Kensington security slot	Provides mounting a security cable to prevent theft or unauthorized use of the tablet.
20	**P2** button	Programmable button (opens **Copilot** application - default).
21	**P1** button	Programmable button (open **Zebra Control Hub** application - default).
22	Dock power / antenna connector	Provides power and antenna connection through the dock.

DT Research DT362DN (Both HHT F & G)



Button	Action
1	Power Button
2	Trigger Buttons
3	Battery Latch
4	Power Button
5	Trigger Buttons
6	Battery Latch

DT Research DT382WH





Input/Output Ports	Button Functions
A - Latest USB/charging (power input)	1 – Power Button
B - Audio jack	2 – Windows Key Button
C - USB port	3 – Programmable Button
D – Smart Card Reader	4 – Brightness Control Button
E – Barcode Scanner	5 – RFID Reader Trigger Button
F – Back camera	6 – Barcode Scanner Trigger Button
G - DC-in jack	
H – RFID Reader	

Zebra TC5301 Mobile Handheld:

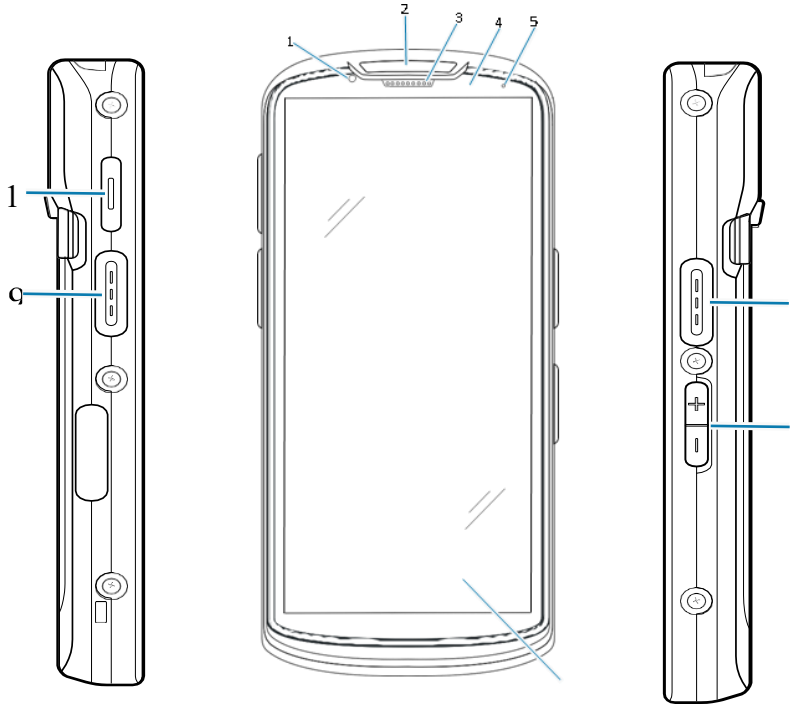

Number	Item	Description
1	Front camera 8MP	Takes photos and videos.
2	Scan LED	Indicates data capture status.
3	Receiver	Use for audio playback in Handset mode.
4	Proximity/light sensor	Determines proximity and ambient light for controlling display backlight intensity.
5	Battery status LED	Indicates battery charging status while charging and application generated notifications.
6, 9	Scan button	Initiates data capture (programmable).
7	Volume up/down button	Increase and decrease audio volume (programmable).
8	6 in. LCD touch screen	Displays all information needed to operate the device.
10	PTT button	Typically used for PTT communications. Where regulatory restrictions exist[1], button is configurable for use with other applications.

Zebra MC9401 Rugged Handheld:

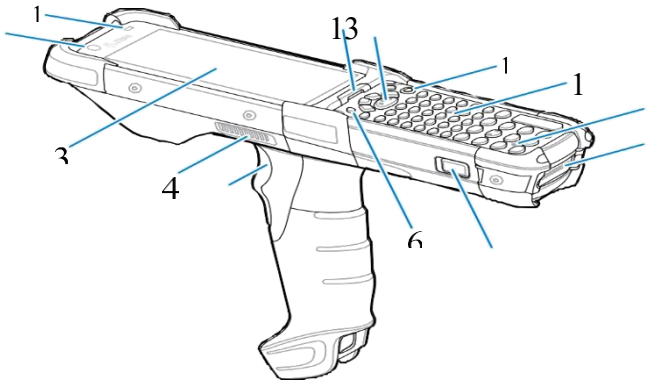

Number	Item	Description
1	Ambient light sensor	Controls display and keyboard backlight.
2	8 MP front-facing camera	Use to take photos and videos.
3	Display	Displays all information needed to operate the device.
4	Speaker side port	Provides audio output for video and music playback.
5	Trigger	Initiates data capture when a scan application is enabled.
6	P1 - dedicated PTT key	Initiates push-to-talk communications (programmable).
7	Battery release latch	Releases the battery from the device. To release the battery, simultaneously press the battery release latches on both sides of the device.
8	Battery	Provides power for operating the device.
9	Microphone	Use for communications in Handset mode.
10	Keypad	Use to enter data and navigate on-screen functions.
11	Power button	Press and hold to turn on the device. Press to turn on or off the screen. Press and hold to select one of these options: • **Power off** - Turn off the device. • **Restart** - Restart the device when the software stops responding.
12	Center scan button	Initiates data capture when a scan application is enabled.
13	Charging/notification LED	Indicates the battery charging status while charging, app-generated notifications, and data capture status.

Zebra MC9401 Rugged Handheld:

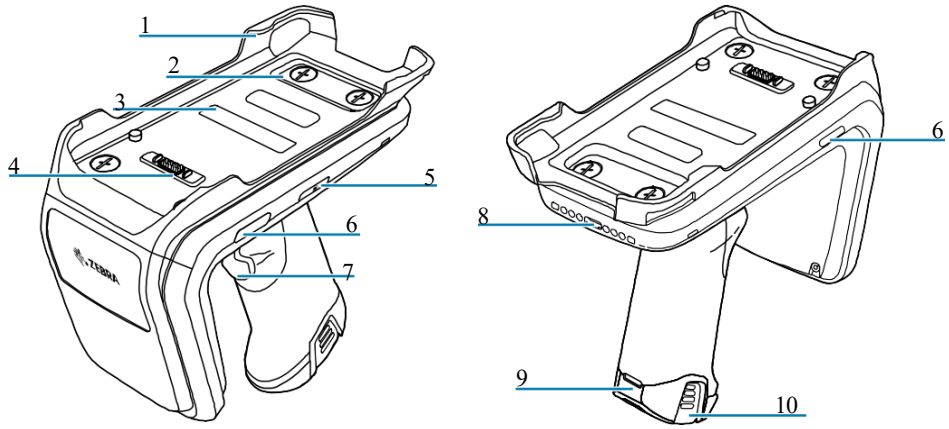

1	Adaptor (Sold Separately)
2	Coin Screws (4)
3	Adaptor Label
4	eConnex™ Communication Port
5	Battery Status LED
6	Decode LED
7	Tri-Function Trigger
8	Charging Contact and USB-C Port
9	Tethering Point for Handstrap
10	Rubber Foot

Software

ZebraDesigner 3 Software

ZebraDesigner 3 barcode label design software makes creating industry standard and compliant labels based on fixed or variable data simple.

ZebraDesigner Professional offers a more robust toolset to create complex label designs, including RFID support, database connectivity, simple VB scripting and data manipulation and concatenation. It requires purchase of a one-time activation license key.

ZebraDesigner Feature Matrix	ZebraDesigner Professional*
Supports files: ZebraDesigner Version 2: LBL format ZebraDesigner Version 3: NLBL format	●
Supports native printer fonts	●

Supports Unicode™	●
Supports native barcodes	●
CPCL, EPL and ZPL Command Language support (CPCL and EPL require the ZDesigner Windows driver v5)	●
ODBC and ASCII file connectivity (Connection to a single database and table on the same label)	●
GS1-128 wizard	●
RFID wizard	●
Keyboard Display Unit (KDU) support	●
Print to file	●
Simple VB script	●
Data entry at print time	●
Pick database records at print time	●
Time/Date and Real Time Clock (RTC)	●
Connectivity: Parallel, Serial, Network, USB, Bluetooth (Bluetooth only applicable with ZDesigner Windows printer driver v10)	●
Windows 10/Windows 11/Windows Server 2022/Windows Server 2025	●

Installation Requirements:

Operating System (32 or 64 bit):

Windows 10 desktop editions
Windows 11 desktop editions
Windows Server 2019
Windows Server 2022
Windows Server 2025

Downloads

System:

Intel or compatible x86 family processor
2 GB RAM
1 GB available disk space
1366 x 768 or higher resolution display

Software/Drivers:

Microsoft .NET Framework v. 4.7.2
ZDesigner Windows printer driver v. 10.6.x.x or above is recommended.
If support for CPCL or EPL printer command languages is required, ZDesigner Windows printer driver v. 5.x can be used

Virtualization
Remote Desktop Services:

With the exception of Hyper-V technologies, Remote Desktop Services and Virtual Machines are not supported.

Compatibility

ZebraDesigner 2 label files

ZebraDesigner 2 Pro label files

Can be opened/edited in ZebraDesigner Essentials 3

Can be opened/edited in ZebraDesigner Professional 3

Training

Four Points shall provide training associated with Technical Engineering Services (TES) that is customized to each task order solution being delivered. The training can be conducted in a group or one-on-one setting and will be based on the task order's work statement.

Warranty Support

Four Points shall provide a minimum three-year warranty (including the initial and separately orderable HHT batteries, but excluding cables and ancillary items, such as power supplies, docking stations, battery charger, etc.) and an optional two-year warranty (excluding batteries and ancillary items) where specified in this PWS, including all parts, labor, and transportation costs for all AIT-7 components provided under this contract. All products delivered under this contract shall have a permanent label affixed to each serialized item (excluding batteries and cables) that, at a minimum, identifies: the contractor's company name, telephone number and website URL. Four Points shall provide a minimum of a three-year warranty for all software products. The three-year warranty will be included in the purchase price of the component and not priced separately.

Preventative Maintenance

GUIDANCE FOR HHT's:

Follow these preventive maintenance steps to ensure optimal performance and longevity:

Cleaning and Disinfecting

- **Use Approved Disinfectants**: Ensure the use of recommended chemical disinfectants such as SANI-CLOTH, Cavi Wipes, or 70% Isopropyl Alcohol.
- **Avoid Film Residue**: Test a small portion of your tablet before cleaning to prevent any film residue. Clean using a damp cloth followed by a dry cloth to remove any cleaning agent residue.

Accessories and Parts Maintenance

- **Battery Care**: Consider battery services such as Proactive Battery Replacement and Battery Maintenance to ensure batteries are in good condition. Replace batteries that cannot maintain an 80% charge.
- **Software Updates**: Keep the software and Android security updates current using LifeGuard™ for Android to protect against security risks and ensure smooth operations.

Cleaning Solutions

- Recommended solutions include Goo Gone, Tuffie Wipes, and Alcohol Prep Pads for thorough cleaning without damaging the tablet surface.

Additional Tips

- Use Zebra's maintenance kits or equivalent tools for proper cleaning.
- Schedule regular checkups to spot and correct potential issues before they escalate.

Summary

Follow these cleaning protocols and consider enrolling in Zebra OneCare™ Maintenance Plans for more comprehensive coverage and support, ensuring your devices remain reliable and in peak condition.

GUIDANCE FOR PRINTERS:

Key Components and Methods

- **Printhead**: Clean frequently with a solvent, especially after every roll of media.
- **Platen Roller**: Use solvent cleaning for optimal performance.
- **Media and Ribbon Sensors**: Blow air to remove particles.
- **Media and Ribbon Paths**: Clean with solvent to prevent buildup.

Maintenance Schedule

The intervals for cleaning can vary based on usage, but here are some general guidelines:

- **Direct Thermal Mode**: Clean printhead after each roll of media or 500 feet of fanfold media.
- **Thermal Transfer Mode**: Clean platen roller after every roll of ribbon.

Tools

- **Preventive Maintenance Kit**: It's recommended to use Zebra's maintenance kit for cleaning. Alternatively, a lint-free cloth dipped in 99.7% isopropyl alcohol can be used.

These maintenance practices help prevent damage and ensure that the print quality remains high. Always refer to the specific product's user guide for detailed instructions.

APM MATS PRODUCTS

ZEBRA THERMAL TRANSFER PRINTER, ZD621



- **AIT printer, Color Touch LCD**
- **Resolution: 203 DPI**
- **Firmware: ZPL II; EPL 2; XML; ZBI; PDF Direct**
- **5 status icon, 3 button user interface**
- **Ethernet, Serial, USB 2.0, USB Host**
- **Ribbon Outside Diameter: 2.6-in/1.34-in.**
- **Ribbon Core I.D. 300m (1-in.)/74m (0.5-in.)**
- **Memory: 512 MB Flash; 256 MB SD RAM**
- **Operating Temp.:40° to 105° F/4.4° to 41° C**
- **Storage Temp.: -40° to 140° F/-40° to 60° C**
- **Electrical: Auto-detectable (PFC Compliant) 100-240VAC,**
- **50-60Hz**

- **TAA Compliant**
- **Three-year comprehensive warranty**
- **Weight: 5.5lbs**

ZEBRA, CONSUMABLES, IMAGE LOCK RESIN RIBBON



- **Dimensions: 2.5" X 244’**
- **Core: 0.5-IN**

MESA UID/RFID Ruggedized Tablet



- **Mesa 4 with embedded CAC reader**
- **Capable of reading UID and RFID**
- **7-in. sun-light readable display**
- **Bluetooth 5.3/WI-FI 6E**
- **4G LTE Cell modem* Cameras: 5MP Front/13MP Rear**
- **I/O USB-C, USB-A, 12V Barrel Jack*Integrated 4G LTE Modem**
- **30W AC Power Supply kit, *Red Corner Bumpers**
- **Embedded CAC reader *16GB RAM *128GB flash storage/128 Internal Storage**
- **Windows 11 OS; Quad-core Intel Pentium N4200 processor**
- **Region-specific frequency configurations(859–873 MHz & 915–930 MHz)**
- **EPC global Gen 2 (ISO 18000-6C) protocol support**
- **Wide output range (0 dBm to +27 dBm)**
- **Software keyboard wedge**
- **TAA and HERO compliant**
- **W/ 2 yr manufacturer warranty**

MESA 7-Inch Multi Battery Charger Kit



- **Allows you to charge two batteries simultaneously from Mesa device.**
- **Features an LED indicator for charging status.**
- **Includes the Removable Battery Charger and the 30W AC Power Supply Kit**

MESA 3 Removable Li-Ion Battery (Rechargeable)



- **Removable Li-Ion battery, 43.2 Whr**
- **Operates 8–10 hours on one charge**
- **Removable battery, easily changeable in field**
- **Optimized for strong performance in cold temperatures**
- **Excellent lifecycle performance**
- **Optional built-in 21.6-Whr battery provides additional 4–5 hours runtime and hot-swap capability**

Zebra Scanner HHT (FI) - Zebra DS9908R



- **Dimensions: 8.0 in. H x 3.9 in. W x 5.75 in. D**

- **Input voltage range: 4.5 to 5.5 VDC Host Powered; 4.5 to 5.5 VDC**
- **External Power Supply Nominal Read Range: 18-inches;**
- **Standard Supported: EPC Class 1 Gen2;**
- **EPC Gen2 V2; ISO-18000-63;**
- **Operating Temp: 32.0° to 122.0° F / 0.0° to 50.0° C**
- **TAA compliant**

Vanguard ID Tag



- **Flat Vanguard ID, Flat thin flexible**
- **Avery AD 321r-6-P 600600 RFID Inlay w/ Impinj Monza chip**
- **Dimensions: 3” x1.5”*Frequency Band: UHF (860-960 MHz)**
- **128 bits EPC, 48 bits TID**
- **Operating Temperature -40 °C to 85 °C / -40 °F to 185 °F**
- **TAA compliant**

Omni-ID Max Rigid (Bin Tags)

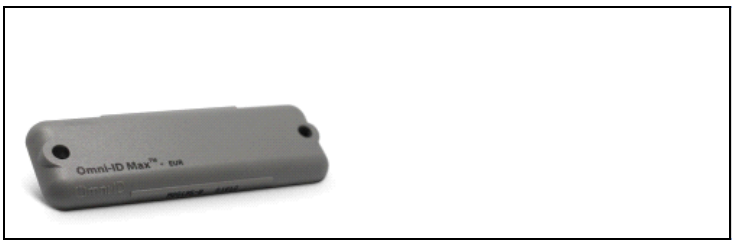

- **TAA compliant**
- **Size (inches) 4.10 x 1.42 x 0.39;**
- **Read Range (Handheld Reader) Up to 10m (32.8 ft);**
- **Frequency Range (MHz) 866–930 (Global); Operating Temperature –40 to +85 C;**
- **401 Olive Green (PMS 5815);**
- **Warranty 3 years**

Omni-ID Max Rigid (Bin Tags)

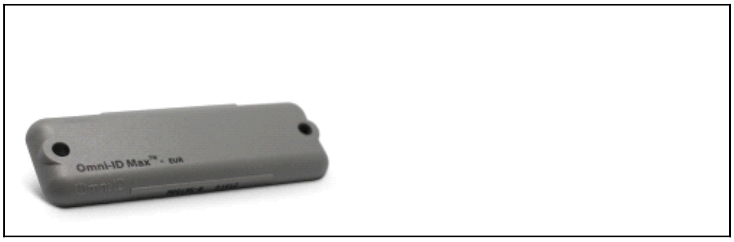

- **TAA compliant; Size (inches) 4.10 x 1.42 x 0.39;**
- **Read Range (Handheld Reader) Up to 10m (32.8 ft);**
- **Frequency Range (MHz) 866–930 (Global);**
- **Operating Temperature –40 to +85 C; 401 Olive Green (PMS 5815) with 503 Foam adhesive (3M 41026);**
- **Warranty 3 years**

Smart-Cart (rolling / mobile cart)



FOUR POINTS TECHNOLOGY

- **PC542 Series, 26x 30, with adjustable inverter settings and HD Power Package;**
- **Rechargeable with est. 10 hours of operating**
- **Monitor mount with 2 mounting brackets: one for tablets, one for monitor**
- **Plexiglass top with hole for cable management tube**
- **Movable shelf with hole for cable management tube**
- **Multi-outlet power surge strip (qty 9) mounted on inside throat power channel w/power button on top**
- **Document holder*Trash can*On wheels**
- **Heavy-Duty Undershelf Keyboard & Mouse Tray**
- **Metal Peg board backing**

AV Cart - 34" x 20"x 29", color RED



- **Top shelf with safety mat**
- **Locking bottom cabinet**
- **3-outlet power strip and 15 FT cord,**
- **4" rubber swivel casters; locking**

Multi-device (32-port) Charging Cart



- **32 AC Outlets**
- **Device Slots: 32**
- **Charges devices up to 15-in. screen (Chromebooks, Laptops, Tablets)**
- **Charges 16 ruggedized tablets *Charging Method: AC**
- **Input Voltage: 120V AC**
- **Mobile (has four 4-inch swivel, locking casters)**
- **Wide handle to move cart**
- **Locking, vented doors**
- **Removable dividers and cord management w/2-year warranty**

Tripp Lite 7-port USB hub, 2.0 Tower



- **Supports USB 2.0 speeds up to 480 Mbps to ensure reliable data transfers Bus-powered hub**
- **Includes optional external power supply for extra power Blue LED indicates the hub is receiving power from the included supply**
- **Compatible with all major operating systems, including Windows and macOS Plug-and-play operation with no software required for easy, immediate installation**
- **3-year limited warranty TAA compliant**

8-Outlet Industrial Safety Surge Protector



- **25FT cord,**
- **3900 Joules, cord wrap and hang holes**

U35 Heat Seal Label Press Machine



- **3x5 inch platen sie, approx. 13 deep x 11.5 wide x 14.25 high**
- **Digital and adjustable timer & temperature control.**
- **With 3-year warranty**

Unitherm heat seal film

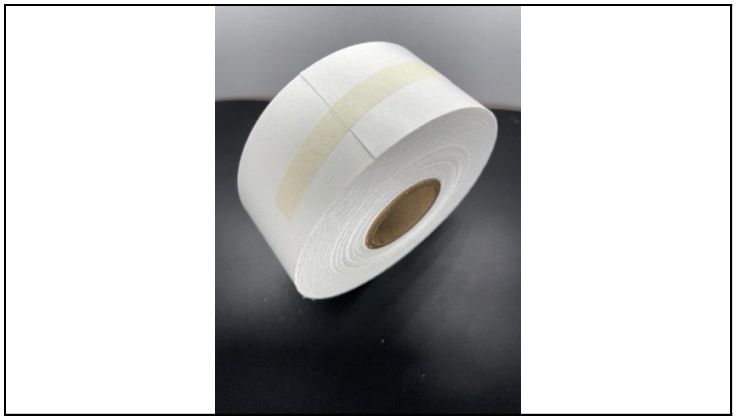

- **(HSF-2X50) UID heat press labels -approx. 500/roll**
- **2.00" X 50 Yard roll of continuous heat seal film clothing label material**
- **Approximate 500 labels per roll (3.00" x 2.00") print side wound in carrier paper wound out**

Golf tube, durable black plastic tube

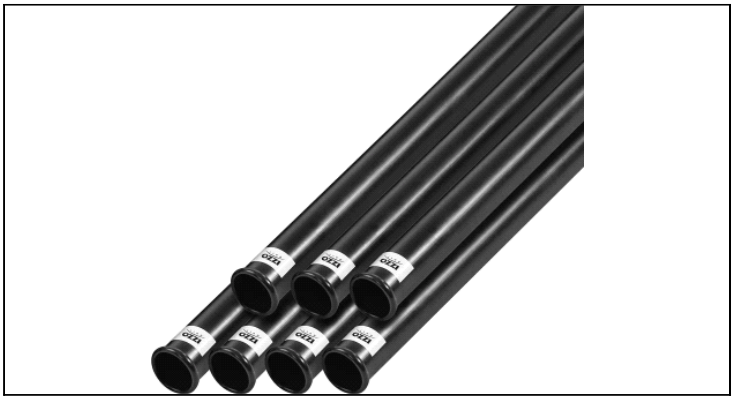

- **33.75" x 1.5"**

Stainless Steel Ties package



- **14.3" Long, 450lb Tensile Strength, SS304, Metal,**
- **50/pkgMaterial: Stainless Steel (SS304) Material Shortcut:**
- **SS304 Flammability:**
- **Non-burning Halogen Free:**
- **Yes UV Resistant (Yes/No):**
- **Yes Use Conditions**
- **For Indoor and Outdoor Use Operating Temperature**
- **-112°F to +1000°F (-80°C to +538°C) Reach Compliant (Article 33)**
- **ROHS Compliant**

Black UV Stabilized Nylon Cable Ties - 12", 50 lb



- **Tamperproof ties secure bags, cords and cables permanently**
- **Approved for outdoor use**
- **UL Listed 6.6 nylon**
- **Locks tightly - Won't stretch or slide**
- **Temperature range -40° to 185°F**

Swivel Head Rivet Tool



- **Model RHT300**
- **Uses 3/32", 1/8", 5/32" and 3/16" rivets**

Long Pop Rivets



- **3x16-IN, Aluminum, 50 pieces**

CLIN List and Prices

This section shall provide the CLIN List and Prices.

CLIN	Description	Version	Status	Effective Date	Price
XX01 AA	Hand Held Barcode Terminal A (HHT-A)	WIN 11 Pro	Baseline	11/1/2025	$2,839.39
XX01 AA	HHT-A Smartcard Reader			11/1/2025	
XX01 AA	HHT-A Power Supply			11/1/2025	
XX01 AA	HHT-A USB-C Communication and Charging Cable			11/1/2025	
XX01 AA	HHT-A AC line cord for Power Supply			11/1/2025	

XX01 AB	**HHT-A warranty upgrade to add 2 year (total 5 years): 3-yr Z1C SKU for ET6x Windows includes standard maintenance for standard battery**			**11/1/2025**	**$411.09**
XX01 AC	**HHT-A Holster and Shoulder Strap (Requires D-Clips)**			**11/1/2025**	**$120.60**
XX01 AC	**HHT-A Holster and Shoulder Strap D-Clips**			**11/1/2025**	
XX01 AD	**HHT-A Rechargeable Battery (1EA)**			**11/1/2025**	**$102.25**
XX01 AE	**HHT-A Multiple (2) Battery Charger**			**11/1/2025**	**$292.70**
XX01 AE	**Power Supply**			**11/1/2025**	
XX01 AE	**DC Line Cord**			**11/1/2025**	
XX01 AE	**AC line cord for Power Supply**			**11/1/2025**	
XX01 AF	**HHT-A Single Battery Charger / Docking Station**			**11/1/2025**	**$268.74**

XX01 AG	HHT-A One Stylus			11/1/2025	$26.98
XX01 AH	HHT-A Transparent screen protector			11/1/2025	$62.41
XX01 AJ	HHT-A Portable Printer interface cable			11/1/2025	$45.28
x001AJ	HHT-A USB-C to USB-A Adapter			11/1/2025	
XX01 AK	HHT-A Detachable hand strap			11/1/2025	$309.51
XX01 AL	HHT-A Carrying Case			11/1/2025	$73.25
XX01 AM	HTT-A CAC Reader (if not integrated)			11/1/2025	
XX01 BA	Hand Held Barcode Terminal B (HHT-B)	WIN 11 IoT	Baseline	11/1/2025	1701.03
XX01 BB	HHT-B Extended Warranty; add 2 year (total 5 years)			11/1/2025	$155.34
XX01 BC	HHT-B Rechargeable Battery (1EA)			11/1/2025	$141.01
XX01 BD	HHT-B Multiple (2) Battery Charger			11/1/2025	$314.07

XX01 BE	**HHT-B Single Battery Charger / Docking Station**			**11/1/2025**	**$197.75**
XX01 BF	**HHT-B One Stylus**			**11/1/2025**	**$52.98**
XX01 BG	**HHT-B Transparent screen protector**			**11/1/2025**	**$19.86**
XX01 BH	**HHT-B Portable Printer interface cable**			**11/1/2025**	**$20.62**
XX01 BJ	**HHT-B Detachable hand strap**			**11/1/2025**	**$22.49**
XX01 BK	**HHT-B Carrying Case**			**11/1/2025**	**$55.04**
XX01 BL	**HTT-B CAC Reader (if not integrated)**			**11/1/2025**	
XX01 CA	**Hand Held Barcode Terminal C (HHT-C)**	**WIN 11 PRO**	**Baseline**	**11/1/2025**	**$2,462.59**
XX01 CA	**HHT-C Smartcard Reader**			**11/1/2025**	
XX01 CA	**HHT-C Power Supply**			**11/1/2025**	
XX01 CA	**HHT-C USB-C Communication and Charging Cable**			**11/1/2025**	
XX01 CA	**HHT-C AC line cord for Power Supply**			**11/1/2025**	

XX01 CB	**HHT-A warranty upgrade to add 2 year (total 5 years): 3-yr Z1C SKU for ET6x Windows includes standard maintenance for standard battery**			**11/1/2025**	**$411.09**
XX01 CC	**HHT-C Holster and Shoulder Strap Note: Requires D-Clips**			**11/1/2025**	**$120.60**
XX01 CC	**HHT-C Holster and Shoulder Strap D-Clips**			**11/1/2025**	
XX01 CD	**HHT-C Rechargeable Battery (1EA)**			**11/1/2025**	**$102.25**
XX01 CE	**HHT-C Multiple (2) Battery Charger**			**11/1/2025**	**$215.73**
XX01 CF	**HHT-A Single Battery Charger / Docking Station**			**11/1/2025**	**$268.74**
XX01 CG	**HHT-C One pack of (1) tethered replacement styli**			**11/1/2025**	**$26.98**

XX01 CH	HHT-C Transparent screen protector (3 Pack)			11/1/2025	$62.41
XX01 CJ	HHT-C portable printer interface connection and cable			11/1/2025	$45.28
X001CJ	HHT-A USB-C to USB-A Adapter			11/1/2025	
XX01 CK	HHT-C Detachable hand strap			11/1/2025	$295.98
XX01 CL	HHT- C Carrying Case			11/1/2025	$73.25
XX01 CM	HHT- C CAC Reader (if not integrated)			11/1/2025	
XX01 FA	Hand-Held Terminal-F (HHT-F)	WIN 11 IoT	Baseline	1/30/2026	$1,825.66
XX01 FB	HHT-F/ HHT-G warranty upgrade to add 2 year (total 5 years)			1/30/2026	$167.42
XX01 FC	HHT-F or HHT-G Pistol Grip			1/30/2026	$236.50
XX01 FD	HHT-F or HHT-G Holster &Shoulder Strap (Compatible w/o Pistol Grip)			1/30/2026	$50.64
XX01 FE	HHT-F or HHT-G Holster &Shoulder Strap (Compatible WITH Pistol Grip)			1/30/2026	$17.24

XX01 FF	**HHT-F or HHT-G Rechargeable Battery (1EA)**			**1/30/2026**	**$199.51**
XX01 FG	**HHT-F or HHT-G Multiple (2) Battery Charger**			**1/30/2026**	**$362.69**
XX01 FH	**HHT-F or HHT-G Single Battery Charger / Docking Station (w/o Pistol Grip)**			**1/30/2026**	**$278.20**
XX01 FI	**HHT-F or HHT-G Single Battery Charger / Docking Station (with Pistol Grip)**			**1/30/2026**	**$215.20**
XX01 FJ	**HHT-F or HHT-G One Pack of (1) Tethered Replacement Styli**			**1/30/2026**	**$57.10**
XX01 FK	**HHT-F or HHT-G Transparent Screen Protector**			**1/30/2026**	**$10.23**
XX01 FL	**HHT-F or HHT-G Portable Printer Interface Connection and Cable**			**1/30/2026**	**$20.62**
XX01 FM	**HHT-F or HHT-G Detachable Hand Strap**			**1/30/2026**	**$18.96**
XX01 FN	**HHT-F or HHT-G Battery Charger (Charge only - adapter/cable)**			**1/30/2026**	**$61.00**
XX01 GA	**Hand Held Barcode Terminal H (HHT-G)**	**WIN 11 IoT**	**Baseline**	**1/30/2026**	**$2,233.04**
XX01 HA	**Hand Held Barcode Terminal H (HHT-H)**	**Android 11**	**Baseline**	**11/1/2025**	**$3,036.21**

XX01 HA	**HHT-H Communication and Charging Cable**			**11/1/2025**	
XX01 HA	**HHT-H Power supply**			**11/1/2025**	
XX01 HA	**HHT-H CAC Reader with Cable (Requires Apriva Software License)**			**11/1/2025**	
XX01 HA	**HHT-H Stylus - Pack of 3**			**11/1/2025**	
XX01 HA	**HHT-H CAC Reader Software - Apriva**			**11/1/2025**	
				11/1/2025	
XX01 HA	**HHT-H 3-yr Z1C with Battery maintenance**			**11/1/2025**	
XX01 HB	**HHT-H Extended Warranty; add 2 year (total 5 years): 5-yr Z1C SKU**			**11/1/2025**	**$491.51**
XX01 HC	**HHT-H Power Supply; adaptor and cords: Communication and Charging Cable**			**11/1/2025**	**$45.76**
XX01 HC	**HHT-H Power Supply; adaptor and cords: Power supply**			**11/1/2025**	

XX01 HD	**Hand Held Barcode Terminal H (HHT-H) Single-slot USB/Ethernet capable battery charging cradle kit**			**11/1/2025**	**$562.57**
XX01 HD	**Hand Held Barcode Terminal H (HHT-H) - AC line cord for Workstation connect cradle**			**11/1/2025**	
XX01 HD	**Hand Held Barcode Terminal H (HHT-H) - USB to Ethernet Adaptor**			**11/1/2025**	
XX01 HD	**Hand Held Barcode Terminal H (HHT-H) - Micro USB Activesync Cable**			**11/1/2025**	
XX01 HE	**HHT CAC Reader with Cable (Requires Apriva Software License)**			**11/1/2025**	**$333.30**
XX01 HE	**CAC Reader Software**			**11/1/2025**	
				11/1/2025	
XX01 HF	**HHT-H Rugged Boot**			**11/1/2025**	**$63.13**
XX01 HS	**HHT-H SLED**	**Android 11**	**Baseline**	**11/1/2025**	**$1,732.66**

XX01 HS	**USB Cable for communication/Charging: Communication and Charging cable and cup**			**11/1/2025**	
XX01 HS	**USB Power adapter**			**11/1/2025**	
XX01 HS	**US Line cord 7.5 ft long**			**11/1/2025**	
XX01 HS	**HHT-H RFID SLED 3-yr Z1C includes standard maintenance for standard battery**			**11/1/2025**	
XX01 HT	**HHT-H SLED Extended Warranty: 3 yr Z1C**			**11/1/2025**	**$158.13**
XX01 HU	**HHT-H SLED USB C to USB A Comm. Cord**			**11/1/2025**	**$17.13**
XX01 HV	**HHT-H SLED Single Battery Charger / Docking Station: Charges SLED and TC53 device**			**11/1/2025**	**$308.94**

XX01 HV	**HHT-H SLED Single Battery Charger / Docking Station: Power Adaptor**			**11/1/2025**	
XX01 HV	**HHT-H SLED Single Battery Charger / Docking Station: DC Cable**			**11/1/2025**	
XX01 HV	**HHT-H SLED Single Battery Charger / Docking Station: US Line cord 7.5 ft long**			**11/1/2025**	
XX01 HV	**USB Cable for communication/Charging: Communication and Charging cable and cup**			**11/1/2025**	
XX01 HW	**HHT-H SLED Power Adapter and Cord: Power Adaptor**			**11/1/2025**	**$47.68**
XX01 HW	**HHT-H SLED Power Adapter and Cord: US Line cord 7.5 ft long**			**11/1/2025**	

XX01 HX	**HHT-H SLED eCONNEX adapter**			**11/1/2025**	**55.94**
XX01 JA	**Hand Held Barcode Terminal J (HHT-J)**	**Android 13**	**Baseline**	**11/1/2025**	**$2,101.51**
XX01 JA	**HHT-J Smartcard Reader**			**11/1/2025**	
XX01 JA	**HHT-J One pack of (1) tethered replacement styli**			**11/1/2025**	
XX01 JA	**HHT-A Power Supply**			**11/1/2025**	
XX01 JA	**AC line cord for Power Supply**			**11/1/2025**	
XX01 JA	**HHT-J USB-C Communication and Charging Cable**			**11/1/2025**	
XX01 JA	**HHT-J US Power adapter cord**			**11/1/2025**	
XX01 JA	**HHT-J CAC Reader Software - Apriva**			**11/1/2025**	
				11/1/2025	

XX01 JB	**HHT-J Extended Warranty; add 2 year (total 5 years): 3-yr Z1C SKU for ET6x Android includes Standard maintenance for standard battery**			**11/1/2025**	**$321.85**
XX01 JC	**HHT-J Power Supply**			**11/1/2025**	**$61.56**
XX01 JC	**HHT-J USB-C Communication and Charging Cable**			**11/1/2025**	
XX01 JC	**HHT-J US Power adapter cord**			**11/1/2025**	
XX01 JD	**HHT-J Single Battery Charger / Docking Station - Workstation cradle**			**11/1/2025**	**$644.57**
XX01 JD	**HHT-J Single Battery Charger / Docking Station - Power supply**			**11/1/2025**	

XX01 JD	**HHT-J Single Battery Charger / Docking Station - DC Cable**			**11/1/2025**	
XX01 JD	**HHT-J Single Battery Charger / Docking Station - US Power adaptor cord**			**11/1/2025**	
XX01 JE	**HHT-J Detachable Hand Strap**			**11/1/2025**	**$61.24**
XX01 JF	**HHT-J D-Clips for Strap**			**11/1/2025**	**$55.51**
XX01 JG	**HTT-J CAC Reader**			**11/1/2025**	**$572.21**
XX01 JG	**HHT-J CAC Reader Software - Apriva**			**11/1/2025**	
				11/1/2025	
XX01 JH	**HTT-J Rugged Boot**			**11/1/2025**	**$73.25**
XX01 KA	**Hand Held Barcode Terminal I (HHT-K)**	**Android 13**	**Baseline**	**11/1/2025**	**$2,647.56**
XX01 KA	**Cable adapter for Communication and Charging**			**11/1/2025**	
XX01 KA	**HHT-K Power Supply**			**11/1/2025**	

XX01 KA	**HHT-K USB-A to USB-C communication and charging cable**			**11/1/2025**	
XX01 KA	**HHT-K Stylus (Set of 3)**			**11/1/2025**	
XX01 KA	**HHT-K 3-yr Zebra OneCare includes standard maintenance for standard battery**			**11/1/2025**	
XX01 KB	**HHT-K warranty upgrade to add 2 year (total 5 years): 3-yr Zebra OneCare includes standard maintenance for standard battery**			**11/1/2025**	**$558.11**
XX01 KC	**HHT-K Rechargeable Battery (1EA)**			**11/1/2025**	**$129.75**
XX01 KD	**HHT-K Single Battery Charger / Docking Station**			**11/1/2025**	**$338.09**
XX01 KD	**HHT-K Battery Charger (Charge Only): Power supply**			**11/1/2025**	

XX01 KD	**HHT-K Battery Charger (Charge Only): DC Cable**			**11/1/2025**	
XX01 KD	**HHT-K Battery Charger (Charge Only): AC Line cord**			**11/1/2025**	
XX01 KE	**HHT-K Battery Charger (Charge Only): Four-slot battery charger**			**11/1/2025**	**$414.24**
XX01 KE	**HHT-K Battery Charger (Charge Only): Power supply**			**11/1/2025**	
XX01 KE	**HHT-K Battery Charger (Charge Only): DC Cable**			**11/1/2025**	
XX01 KE	**HHT-K Battery Charger (Charge Only): AC Line cord**			**11/1/2025**	
XX01 KF	**HHT-K Portable Printer Interface Cable**			**11/1/2025**	**$98.91**

XX01 KF	**USB-A female to USB-C female adapter**			**11/1/2025**	
XX01 KG	**HHT-K Pistol Grip**			**11/1/2025**	
XX02	**BARCODE IMAGERS FOR PC INPUT**			**11/1/2025**	
XX02 AA	**Imager for PC Input - General Bar Code (Tethered)**			**11/1/2025**	**$835.97**
XX02 AA	**Imager Cable - Shielded USB: Series A, 12 ft., Coiled**			**11/1/2025**	
XX02 AA	**Imager Stand**			**11/1/2025**	
XX02 AA	**Imager - 3 yr Zebra OneCare Essential**			**11/1/2025**	
XX02 AA	**Imager - 1 yr Zebra OneCare Essential (Optional)**			**11/1/2025**	
XX02 BA	**Imager for PC Input - General Bar Code (Bluetooth)**			**11/1/2025**	**$1,240.19**
XX02 BA	**Imager Cable - Shielded USB: Series A, 12 ft., Coiled**			**11/1/2025**	

XX02 BA	**Imager Communication and Charging Cradle**			**11/1/2025**	
XX02 BA	**Imager - Power adapter**			**11/1/2025**	
XX02 BA	**Imager - DC Cable**			**11/1/2025**	
XX02 BA	**Imager - US Power adapter cable**			**11/1/2025**	
XX02 BA	**Imager - 3 yr Zebra OneCare Essential**			**11/1/2025**	
XX02 BA	**Imager - 1 yr Zebra OneCare Essential (Optional)**			**11/1/2025**	
XX02 CA	**Imager for PC Input - IUID Label Markings**			**11/1/2025**	**$835.97**
XX02 CA	**Imager Cable - Shielded USB: Series A, 12 ft., Coiled**			**11/1/2025**	
XX02 CA	**Imager Stand**			**11/1/2025**	
XX02 CA	**Imager - 3 yr Zebra OneCare Essential**			**11/1/2025**	
XX02 CA	**Imager - 1 yr Zebra OneCare Essential (Optional)**			**11/1/2025**	

XX02 DA	**Imager for PC Input - IUID Direct Part Markings**			**11/1/2025**	**$1,790.46**
XX02 DA	**Imager Cable - Shielded USB: Series A, 12 ft., Coiled**			**11/1/2025**	
XX02 DA	**Imager Stand**			**11/1/2025**	
XX02 DA	**Imager - 3 yr Zebra OneCare Essential**			**11/1/2025**	
XX02 DA	**Imager - 1 yr Zebra OneCare Essential (Optional)**			**11/1/2025**	
XX02 EA	**Imager for PC Input - Extended Reading Range (Tethered)**			**11/1/2025**	**$977.80**
XX02 EA	**Imager Cable - Shielded USB: Series A, 12 ft., Coiled**			**11/1/2025**	
XX02 EA	**Imager Stand**			**11/1/2025**	
XX02 EA	**Imager - 3 yr Zebra OneCare Essential**			**11/1/2025**	
XX02 EA	**Imager - 1 yr Zebra OneCare Essential (Optional)**			**11/1/2025**	

XX03	**BAR CODE LABEL PRINTERS**			**11/1/2025**	
XX03 AA	**Portable/Wearable Bar Code Label Printer**			**11/1/2025**	**$1,091.73**
XX03 AA	**Printer - Power adapter and US Cord**			**11/1/2025**	
XX03 AA	**Printer - Micro-USB to USB Cable**			**11/1/2025**	
XX03 AA	**Portable printer 3-yr Z1C includes battery maintenance**			**11/1/2025**	
XX03 AB	**Rechargeable Battery for Portable/Wearable BC Label Printer**			**11/1/2025**	**$121.04**
XX03 AC	**Battery Charger for Portable/Wearable BC Label Printer**			**11/1/2025**	**$153.88**
XX03 AD	**Carrying Case with Strap for Portable/Wearable BC Label Printer**			**11/1/2025**	**$155.75**

XX03 AE	**4" x 6 " Label and Ribbon Set for Portable/Wearable BC Label Printer (6 rolls): 10008530 (720/roll, 4/box)**			**11/1/2025**	**$105.38**
XX03 BA	**Stationary Bar Code Label Printer**			**11/1/2025**	**$1,848.79**
XX03 BA	**Stationary Bar Code Label Printer - 3 yr Z1C**			**11/1/2025**	
XX03 BB	**Bar Code Label Printer - B - Stationary, with Installed Take-Up Reel**			**11/1/2025**	**$2,057.98**
XX03 BB	**Stationary Bar Code Label Printer - 3 yr Z1C**			**11/1/2025**	
XX03 BC	**Roll of 4" by 6" Synthetic Label Stock (8 inch diameter roll) for Stationary: PolyPro 4000T/10008530 (4 rolls/box, 720/roll)**			**11/1/2025**	**$390.60**

XX03 BD	**Roll of 4" by 3" Synthetic Label Stock (8 inch diameter roll) for Stationary: PolyPro 4000T/10008531 (1 roll/box, 1420/roll)**			**11/1/2025**	**$398.56**
XX03 BE	**Resin Ribbon for 4" Width Labels for Stationary BC Label Printer: 6200 Resin/ 06200BK11045 (6/box)**			**11/1/2025**	**$213.44**
XX04	**PASSIVE RFID (pRFID) HARDWARE**			**11/1/2025**	
XX04 AA	**pRFID Fixed Reader**			**11/1/2025**	**3193.14**
XX04 AA	**pRFID Antenna**			**11/1/2025**	
XX04 AA	**pRFID Antenna Cable: 68" LMR-240, RP-TNC STR Plug to N STR Plug, IP67 Sealed**			**11/1/2025**	
XX04 AA	**DC/DC Power supply - IP67 sealed**			**11/1/2025**	
XX04 AA	**M12 to M12 DC Output cable**			**11/1/2025**	

XX04 AA	M12 to IEC Plug AC line cord			11/1/2025	
XX04 AA	Ethernet Cable			11/1/2025	
XX04 AA	US Line cord			11/1/2025	
XX04 AA	3 Year Zebra OneCare Essential			11/1/2025	
XX04 AB	pRFID Fixed Reader Universal Mounting Kit			11/1/2025	221.03
XX04 BA	pRFID Vehicle Mount Fixed Reader w/antennas			11/1/2025	3411.75
XX04 BA	pRFID Vehicle Mount Fixed Reader mount			11/1/2025	
XX04 BA	DC/DC Power supply - IP67 sealed			11/1/2025	
XX04 BA	M12 to M12 DC Output cable			11/1/2025	
XX04 BA	M12 to Flying Leads, DC Input Line Cord			11/1/2025	
XX04 BA	US Line cord			11/1/2025	
XX04 BA	3 Yr Zebra OneCare Essential			11/1/2025	
XX04 CA	pRFID SmartTable			11/1/2025	9986.98

XX04 DA	**Handheld Terminal-Passive RFID A (HHT-pRFID-A)**			**11/1/2025**	**3061.39**
XX04 DA	**Handheld Terminal charging and communication cable cup**			**11/1/2025**	
XX04 DA	**USB Power adapter**			**11/1/2025**	
XX04 DA	**CAC Reader with Cable (Requires Apriva Software License)**			**11/1/2025**	
XX04 DA	**CAC Reader Software - Apriva**			**11/1/2025**	
				11/1/2025	
XX04 DA	**HHT-H MC33xr Stylus (Pack of 3)**			**11/1/2025**	
XX04 DA	**Handheld Terminal 3-yr Z1C includes Standard maintenance for standard battery**			**11/1/2025**	
XX04 DB	**HHT-pRFID-A Carrying Case**			**11/1/2025**	**100.59**
XX04 DB	**HHT-pRFID-A Carrying Case shoulder strap**			**11/1/2025**	
XX04 DC	**HHT-pRFID-A Rechargeable Battery**			**11/1/2025**	**$108.61**

XX04 DD	**HHT-pRFID-A Battery Charger / Docking Station;**			**11/1/2025**	**$330.75**
XX04 DD	**HHT-pRFID-A Power adapter**			**11/1/2025**	
XX04 DD	**HHT-pRFID-A - AC line cord for Workstation connect cradle**			**11/1/2025**	
XX04 DD	**HHT- DC power cord**			**11/1/2025**	
XX04 DD	**HHT Micro-USB to USB active sync cable**			**11/1/2025**	
XX04 DE	**CAC Reader with Cable (Requires Apriva Software License)**			**11/1/2025**	**$444.39**
XX04 DE	**Handheld Terminal charging and communication cable cup**			**11/1/2025**	
XX04 DE	**CAC Reader Software - Apriva**			**11/1/2025**	
				11/1/2025	
XX04 DF	**HHT-pRFID-A Printer Interface Cable**			**11/1/2025**	**$37.75**
X004DF	**USB-A female to USB-A female adapter**			**11/1/2025**	

XX04 EA	**pRFID Thermal Transfer Printer;**			**11/1/2025**	**$3,453.55**
XX04 EA	**pRFID Thermal Transfer Printer - USB Interface Cable, 6 ft (A to B)**			**11/1/2025**	
XX04 EA	**pRFID Thermal Transfer Printer - Preventive maintenance kit**			**11/1/2025**	
XX04 EA	**pRFID Four (4") Wax/Resin Ribbon, 110mmx450m (4.33inx1476ft), 3200; High Performance, 25mm (1in) core, 6/box**			**11/1/2025**	
XX04 EA	**Bar Code Label Design and Printing Software: ZebraDesigner Pro 3, Activation Key**			**11/1/2025**	
XX04 EA	**pRFID Thermal Transfer Printer - 3 Year Zebra OneCare**			**11/1/2025**	

XX04 EB	**pRFID Shipping Tag - 4" x 2" (2,000 labels /roll): 10038998 (2000/roll, 1 roll/box)**			**11/1/2025**	**$132.86**
XX04 EC	**pRFID Shipping Tag - 4" x 6" (500 labels /roll): 10038996 (1000/roll, 1/box)**			**11/1/2025**	**$84.97**
XX04 ED	**pRFID Four (4") Wax/Resin Ribbon, 110mmx450m (4.33inx1476ft), 3200; High Performance, 25mm (1in) core, 6/box**			**11/1/2025**	**$180.62**
XX05	**BARCODE LABEL AND FORM DESIGN SOFTWARE**			**11/1/2025**	
XX05 AA	**Bar Code Label Design and Printing Software: ZebraDesigner Pro 3, Activation Key**			**11/1/2025**	**$226.49**

XX05 AA	**Technical & Software Support Contract 8/5, 1 Year ZebraDesinger Pro V3**			**11/1/2025**	
XX06	**IRIDIUM SATELLITE MODEM**			**11/1/2025**	
XX06 AA	**Satellite Iridium Modem w/ GPS, NAL Satellite Modem**			**11/1/2025**	**1842.78**
XX06 AB	**Mast Mount Antenna**			**11/1/2025**	**489.79**
XX06 AC	**GPS Antenna**			**11/1/2025**	**115.36**
XX06 AD	**AC/DC Power Adapter (if required for operation)**			**11/1/2025**	**727.42**
XX06 AE	**10-foot Serial Cable**			**11/1/2025**	**220.41**
XX07	**EXPEDITED DELIVERY FOR HARDWARE AND SOFTWARE**			**11/1/2025**	
XX07 AA	**Expedited delivery CONUS**			**11/1/2025**	
XX07 AB	**Expedited delivery OCONUS**			**11/1/2025**	
XX08	**TECHNICAL ENGINEERING SERVICES (TES)**			**11/1/2025**	
XX08 AA	**Project Manager**			**11/1/2025**	

XX08 AB	**Senior Information Systems Engineer**			**11/1/2025**	
XX08 AC	**Senior Programmer**			**11/1/2025**	
XX08 AD	**Junior Programmer**			**11/1/2025**	
XX08 AE	**Data Communication/ Network Specialist**			**11/1/2025**	
XX08 AF	**Radio Frequency Technical Radio Specialist**			**11/1/2025**	
XX08 AG	**Senior Field Engineer**			**11/1/2025**	
XX08 AH	**Senior Systems Engineer**			**11/1/2025**	
XX08 AI	**Technical Writer**			**11/1/2025**	
XX09	**INCIDENTAL MATERIALS**			**11/1/2025**	
XX09 AA	**Incidental Materials**			**11/1/2025**	
XX10	**TRAVEL**			**11/1/2025**	
XX10 AA	**Travel Expenses**			**11/1/2025**	
XX10 AB	**Per Diem**			**11/1/2025**	
XX11	**SERVICE CONTRACTING REPORTING (SCR)**			**11/1/2025**	

APM- MATS:

XX03CA	**ZEBRA THERMAL TRANSFER PRINTER, ZD621** *AIT printer, Color Touch LCD *Resolution: 203 DPI *Firmware: ZPL II; EPL 2; XML; ZBI; PDF Direct *5 status icon, 3 button user interface *Ethernet, Serial, USB 2.0, USB Host *Ribbon Outside Diameter: 2.6-in/1.34-in. *Ribbon Core I.D. 300m (1-in.)/74m (0.5-in.) *Memory: 512 MB Flash; 256 MB SD RAM *Operating Temp.:40° to 105° F/4.4° to 41° C *Storage Temp.: -40° to 140° F/-40° to 60° C *Electrical: Auto-detectable (PFC Compliant) 100-240VAC, 50-60Hz *TAA Compliant *Three-year comprehensive warranty *Weight: 5.5lbs	WIN 11 Pro	Baseline	8/3/2026	$ 909.63
XX03CB	**ZEBRA, CONSUMABLES, IMAGE LOCK RESIN RIBBON** *Dimensions: 2.5" X 244' *Core: 0.5-IN *12 Rolls per Case			8/3/2026	$ 312.91
XX04FA	**MESA UID/RFID Ruggedized Tablet:** Mesa 4 with embedded CAC reader. *Capable of reading UID and RFID *7 sun-light readable display *Bluetooth 5.3/WI-FI 6E *4G LTE Cell modem* Cameras: 5MP Front/13MP Rear *I/O USB C, USB A, 12V Barrel Jack*Integrated 4G LTE Modem *30W AC Power Supply kit, *Red Corner Bumpers *Embedded CAC reader *16GB RAM *128GB flash storage/128 Internal Storage *Windows 11 OS; Quad-core Intel Pentium N4200 processor *Region-specific frequency configurations(859–873 MHz & 915–930 MHz)*EPC global Gen 2 (ISO 18000-6C) protocol support *Wide output range (0 dBm to +27 dBm) *Software keyboard wedge * TAA and HERO compliant*w/ 2 yr manufacturer warranty. Includes temporary supply chain surcharge of $635.00. Prices	Baseline - -	Android 14	8/3/2026	$6,236.37

	may decrease .				
XX04FB	**MESA 7-Inch Multi Battery Charger Kit** *Allows you to charge two batteries simultaneously from Mesa device. *Features an LED indicator for charging status. *Includes the Removable Battery Charger and the 30W AC Power Supply Kit	Android 14	Baseline	8/3/2026	$ 513.64
XX04FC	**MESA 3 Removable Li-Ion Battery (Rechargeable)** *Removable Li-Ion battery, 43.2 Whr*Operates 8–10 hours on one charge*Removable battery, easily changeable in field*Optimized for strong performance in cold temperatures*Excellent lifecycle performance*Optional built-in 21.6-Whr battery provides additional 4–5 hours runtime and hot-swap capability	Android 14	Baseline	8/3/2026	$ 232.95
XX04FD	**Zebra Scanner HHT (FI) - Zebra DS9908R** Dimensions: 8.0 in. H x 3.9 in. W x 5.75 in. DInput voltage range: 4.5 to 5.5 VDC Host Powered; 4.5 to 5.5 VDC External Power Supply Nominal Read Range: 18-inches; Standard Supported: EPC Class 1 Gen2; EPC Gen2 V2; ISO-18000-63; Operating Temp: 32.0° to 122.0° F / 0.0° to 50.0° CTAA compliant	WIN 11 Pro	Baseline	8/3/2026	$1,141.67
XX04GA	**Vanguard ID Tag** *Flat Vanguard ID, Flat thin flexible*Avery AD 321r-6-P 600600 RFID Inlay w/ Impinj Monza chip*Dimensions: 3” x1.5”*Frequency Band: UHF (860-960 MHz) *128 bits EPC, 48 bits TID*Operating Temperature -40 °C to 85 °C / -40 °F to 185 °F*TAA compliant			8/3/2026	$ 18.77
XX04GB	**Omni-ID Max Rigid (Bin Tags)** TAA compliant; Size (inches) 4.10 x 1.42 x 0.39; Read Range (Handheld Reader) Up to 10m (32.8 ft); Frequency Range (MHz) 866–930 (Global); Operating Temperature –40 to +85 C; 401 Olive Green (PMS 5815); warranty 3 years, TAA compliant			8/3/2026	$ 23.75
XX04GC	**Omni-ID Max Rigid (Bin Tags)** TAA compliant; Size (inches) 4.10 x 1.42 x 0.39; Read Range (Handheld Reader) Up to 10m (32.8 ft); Frequency Range (MHz) 866–930 (Global); Operating Temperature –40 to +85 C; 401 Olive Green (PMS 5815) with 503 Foam adhesive (3M 41026); warranty 3 years, TAA compliant			8/3/2026	$ 23.75

XX12AA	**Smart-Cart (rolling / mobile cart)** *PC542 Series, 26x 30, with adjustable inverter settings and HD Power Package; Rechargeable with est. 10 hours of operating*Monitor mount with 2 mounting brackets: one for tablets, one for monitor*Plexiglass top with hole for cable management tube*Movable shelf with hole for cable management tube*Multi-outlet power surge strip (qty 9), mounted on inside throat of power channel w/power button on top*Document holder*Trash can*On wheels*Heavy-Duty Undershelf Keyboard & Mouse Tray*Metal Peg board backing			8/3/2026	$7,323.86
XX12AB	**AV Cart - 34" x 20"x 29", color RED**, top shelf with safety mat, locking bottom cabinet, 3-outlet power strip and 15 FT cord, 4" rubber swivel casters; locking			8/3/2026	$ 842.05
XX12AC	**Multi-device (32-port) Charging Cart** *32 AC Outlets*Device Slots: 32*Charges devices up to 15-in. screen (Chromebooks, Laptops, Tablets) *Charges 16 ruggedized tablets *Charging Method: AC *Input Voltage: 120V AC *Mobile (has four 4-inch swivel, locking casters) *Wide handle to move cart *Locking, vented doors *Removable dividers and cord management *2-year warranty			8/3/2026	$2,736.36
XX12AD	**Tripp Lite 7-port USB hub, 2.0 Tower.** Supports USB 2.0 speeds up to 480 Mbps to ensure reliable data transfers Bus-powered hub includes optional external power supply for extra power Blue LED indicates the hub is receiving power from the included supply Compatible with all major operating systems, including Windows and macOS Plug-and-play operation with no software required for easy, immediate installation 3 year limited warranty TAA compliant	-		8/3/2026	$ 98.86
XX12AE	**8-Outlet Industrial Safety Surge Protector**, 25FT cord, 3900 **Joules, cord wrap, hang holes**			8/3/2026	$ 167.05
XX12AF	**U35 Heat Seal Label Press Machine** 3x5 inch platen sie, approx. 13 deep x 11.5 wide x 14.25 high, with digital and adjustable timer & temperature control. With 3-year warranty.			8/3/2026	$1,215.91

XX12AG	**Unitherm heat seal film** (HSF-2X50) UID heat press labels -approx. 500/roll. 2.00" X 50 Yard roll of continuous heat seal film clothing label material; about 500 labels per roll (3.00" x 2.00") print side wound in carrier paper wound out			8/3/2026	$ 335.23
XX12AH	**Golf tube, durable black plastic tube**, 33.75" x 1.5"			8/3/2026	$ 23.86
XX12AJ	**Stainless Steel Ties package**, 14.3" Long, 450lb Tensile Strength, SS304, Metal, 50/pkgMaterial: Stainless Steel (SS304) Material Shortcut: SS304 Flammability: Non-burning Halogen Free: Yes UV Resistant (Yes/No): Yes Use Conditions: For Indoor and Outdoor Use Operating Temperature: -112°F to +1000°F (-80°C to +538°C) Reach Compliant (Article 33): Yes ROHS Compliant: Yes			8/3/2026	$ 94.32
XX12AK	**Black UV Stabilized Nylon Cable Ties - 12", 50 lb** •Tamperproof ties secure bags, cords and cables permanently. •Approved for outdoor use. •UL Listed 6.6 nylon. •Locks tightly - Won't stretch or slide. •Temperature range -40° to 185°F.			8/3/2026	$ 12.00
XX12AL	**Swivel Head Rivet Tool,** Model RHT300, uses 3/32", 1/8", 5/32" and 3/16" rivets			8/3/2026	$ 43.18
XX12AM	**Long Pop Rivets,** Arrow, P/N RMA3/16IP, 3x16-IN, Aluminum, 50 pieces			8/3/2026	$ 28.41